PROHD

DS215FHD

21.5" 16:9 LED Panel

DS215FHD

Panel Type	21.5" 16:9 LED Panel
Case Type	Plastic
Maximum Resolution	1920(H) x 1080(V)
Active Display Area	476.64 (H) x 268.11 (V) mm
Pixel Pitch	0.24825 (H) x 0.24825 (V) mm
Bezel Thickness	Top/Left/Right 20mm, Bottom 35mm
Contrast Ratio	1000:1
Brightness	250cd/m2
Response Time	5ms
Viewing Angle	170°/160° (H/V)
Display Colours	16.7M
Video Synchronization	Yes
PC Compatible Frequency	30-60KHz(H)/56-75KHz(V)
Adjustable Colour Temperature	9300K/6500K/5800K/User
Video Compatiblity	NTSC/PAL
Aspect Ratio	16:9
VGA Auto Frequency correction	Yes
Speaker	2 x 2.5w
Number of Speakers	2
Sound Demodulation	Audio, Stereo
Mute	Yes
Work Humidity	5% - 90%
Work Temperature	-10° /+50°
Volume +/- Power On/Off	Yes

IN/OUT INTERFACE

Video Interface	1x BNC Composite In,1x BNC Composite Out, 1x VGA, 1x HDMI
Audio Interface	1x PC Audio
Power Interface	DC in x 1
Termination	75 Ohms
Safety & EMC Certification	CE, RoHS, FCC-DOC
Vesa Standard Mount	75mm x 75mm
Stand Type	Desktop
Colour	Black
Button Position	Front Face, Bottom
Packing Dimension	580 x 120 x 440mm
NET Weight	3.7 Kg
GROSS Weight	4.2 Kg

POWER

Power Supply Voltage	12V DC, 3 Amp
	AC110V - 240V 50/60 Hz
Power Consumption	<25W

OSD CONTROLS

Contrast, Brightness, Colour, Sharpness, Colour Temperature

OSD LANGUAGE

English, German, Italian, Spanish, French, Russian, Portuguese and Polish

ACCESSORIES

VGA Cable, User Manual, Audio Cable, Power Adapter, Power Lead

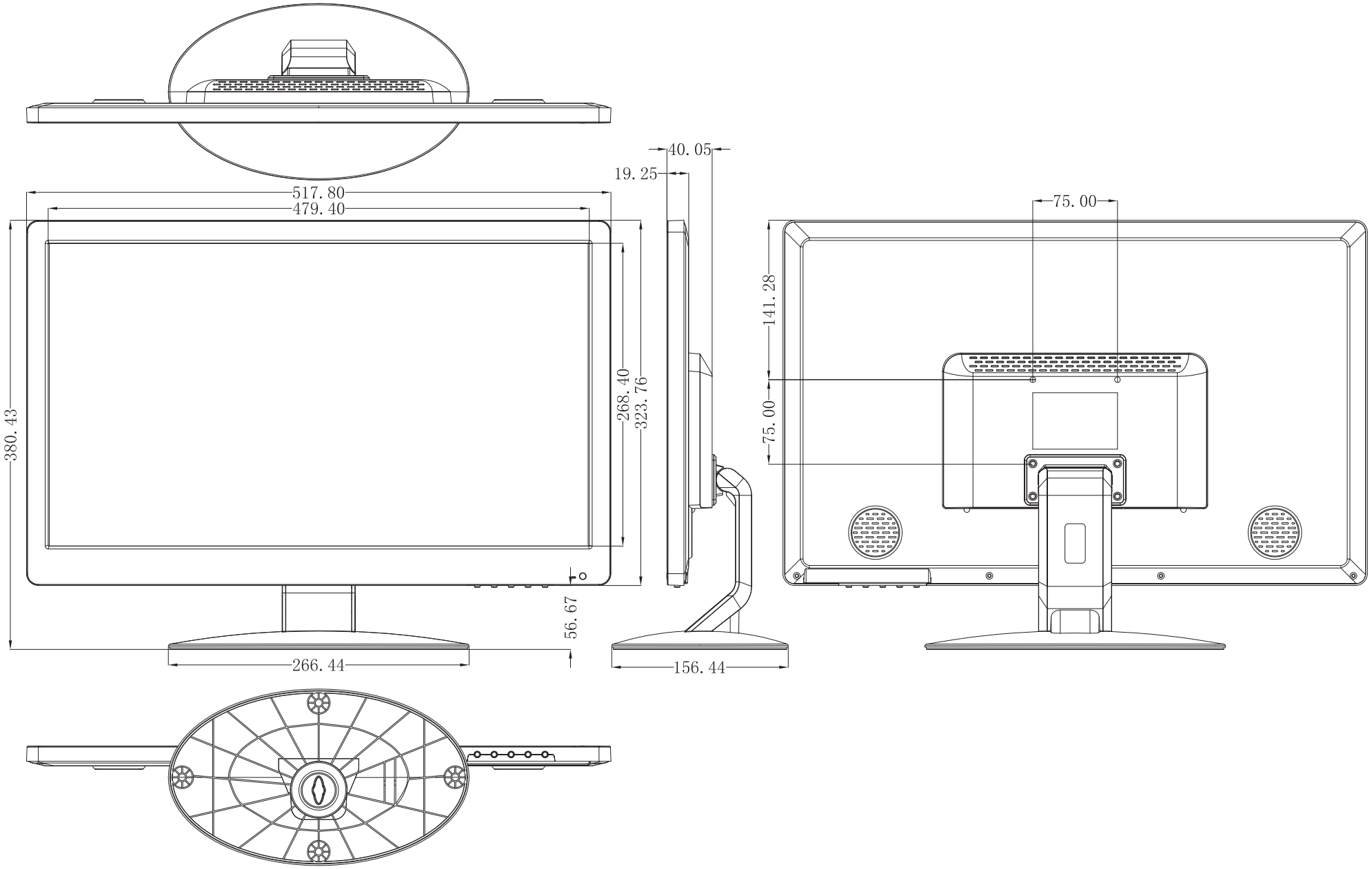
517.80
479.40
380.43
268.40
323.76
56.67
266.44
40.05
19.25
156.44
75.00
141.28
75.00